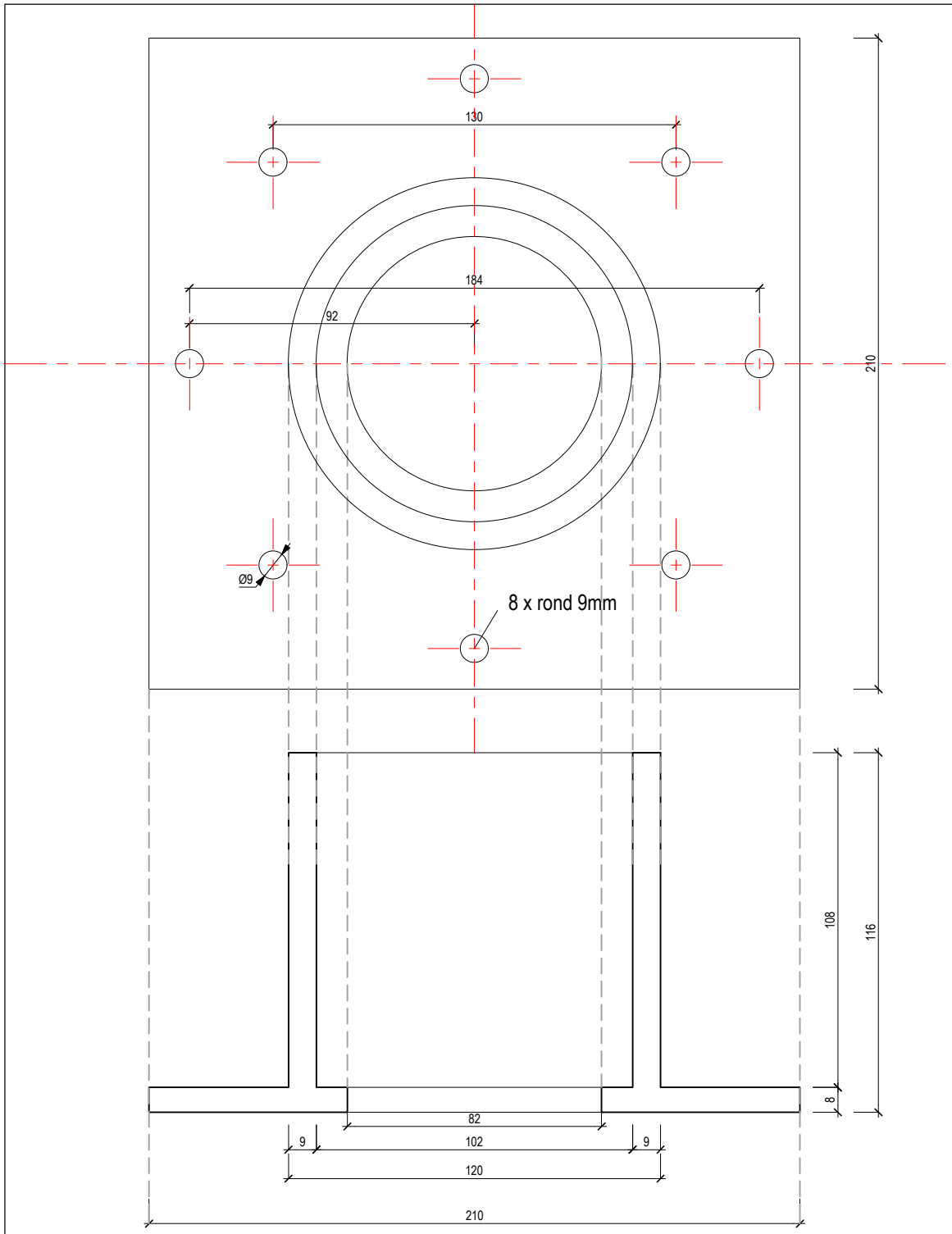

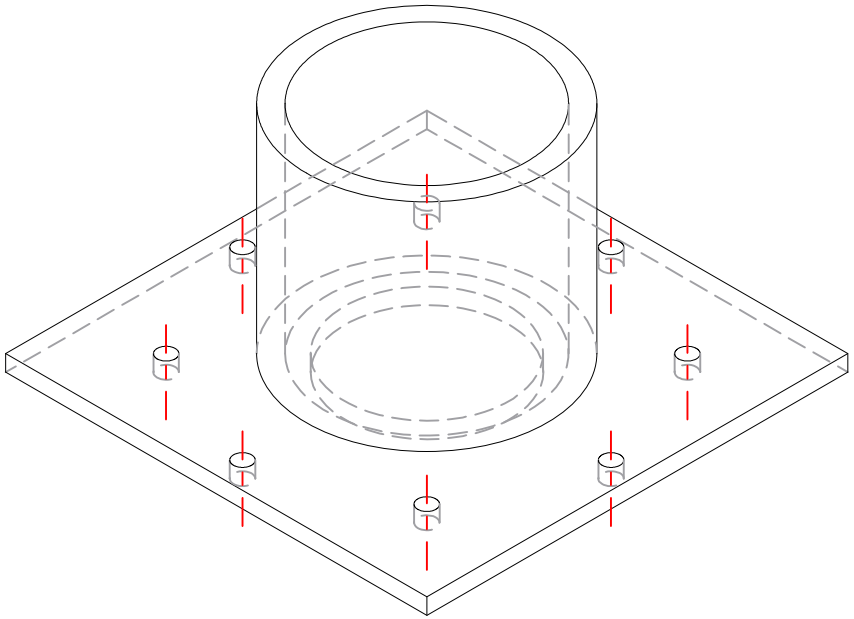

Scale: 1:2			DC Columns
	date	name	
drawn	27-07-20	coussement	
material		aluminium	
standard			
			DC-100 FIX D P1 — 1/2 — A4

DC columns
architectural ornaments